Fostoria Oven for Laboratory and R&D Testing

Model 9800001

fostoria®
PROCESS EQUIPMENT DIVISION

- **Easily converts to three configurations, to match the application**
- **Infinite heat output**
- **T-3, short-wave infrared lamps for fast and precise control**
- **Oven tray and baffles to simulate actual oven performance**

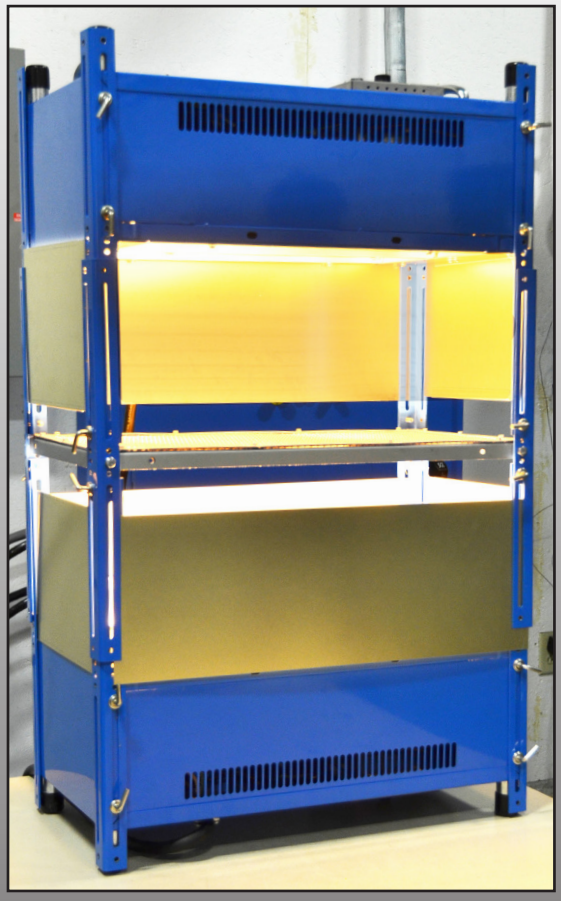

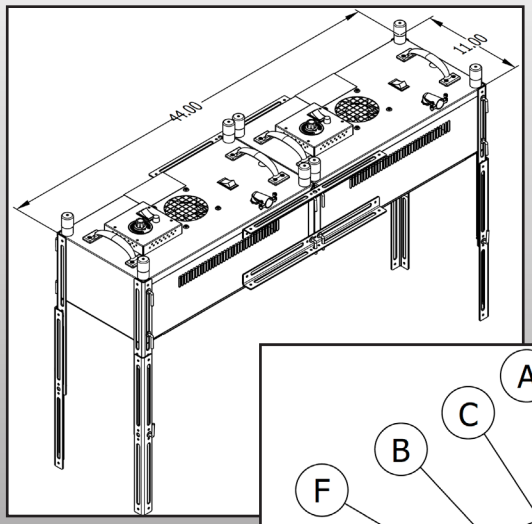

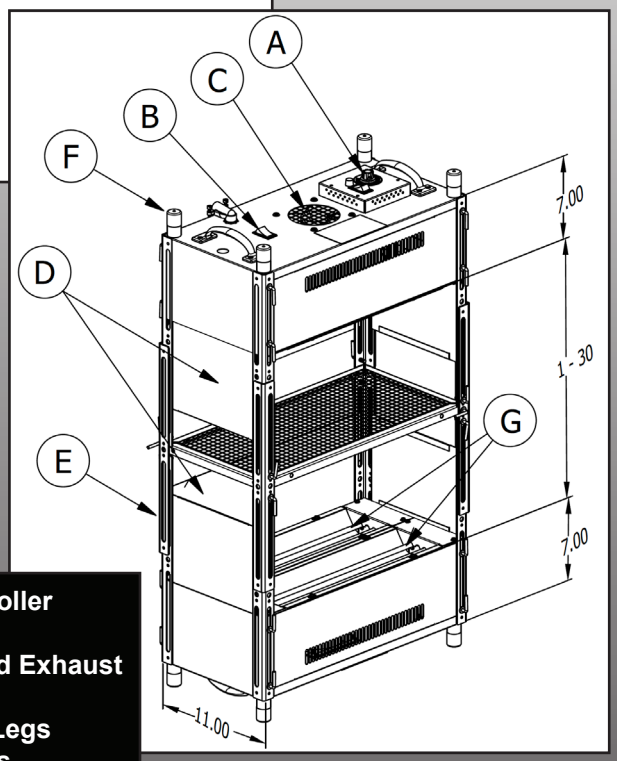

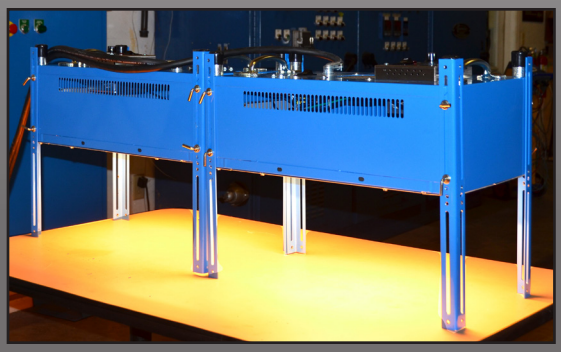

A. Proportional Controller
B. On-Off Switch
C. Fan for Cooling and Exhaust
D. Side Baffles
E. Support Brackets/Legs
F. Protective Bumpers
G. 8 Quartz Infrared Lamps (1600W / 240V ea)

This versatile lab oven allows our customers to perform a variety of initial tests in their own R&D facilities, without the time and expense involved with shipping product and materials to our test lab here in Tennessee. This oven can provide you with data that will best enable us to finalize the application at Fostoria and can help shorten long-range development projects.

Fostoria Oven for Laboratory and R&D Testing

Model 9800001

fostoria®
PROCESS EQUIPMENT DIVISION

3-in-1 Testing Oven

The (2) main heat sections of the oven can be easily configured with the mounting brackets as shown in the photos, and the arrangement will depend on how the product will eventually be presented into the oven. The banks can be opposed in an 11” x 22” design for heat from opposite sides; or be converted to an 11” x 44” or 22” x 22” pattern for one sided heat. The frame brackets allow heat sections in the opposing position to extend from 1” to 30” apart. Handles on the top allow for easy handling, and rubber feet prevent marring of table tops.

A set of baffles is provided to enclose all four sides in any configuration, if necessary. A product tray is also included.

The oven includes a total of (8) T-3 short-wave, clear quartz infrared lamps, which can be controlled in an infinite range to impinge short-medium-or long wave infrared on the product. Each lamp is 1600 watts, at 240 volt. Total electrical draw is 12.8 Kw (53.4 amps, 240 V, single phase) at full power. Each heater section has a 12-ft, #12/3 cable. Cable termination to the power source (by customer) can be made with a plug/receptacle or wired directly to a J-box with disconnect or other acceptable and safe device. The disconnect, breaker or any other device must be rated for at least 35 amps per heater section.


11” x 44”

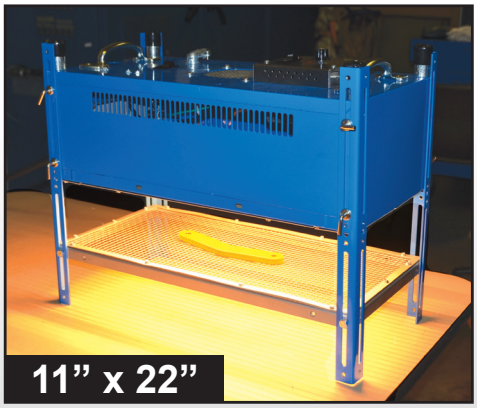
11” x 22”

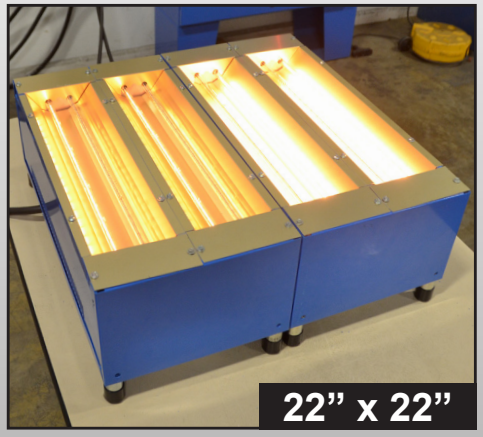
22” x 22”

Controls

Each of the two banks has a separate proportional controller, fan motor and on/off switch. When switched to the ON position, two of the four lamps energize. The potentiometer will regulate the other two lamps from zero to full output. A radiometer (optical pyrometer) is available from Fostoria that reads non-contact temperatures on the surface of the product, and can be purchased as an option to this test oven. Hand held radiometers are also excellent for reading surface temperatures.

The built-in fan in each heater section removes heated air from the interior of the modular sections, to ensure safer operation and longer lamp life.